CogniMouse: On Detecting Users' Task Completion Difficulty through Computer Mouse Interaction

Marios Belk
Dept. of Computer Science
University of Cyprus
CY-1678 Nicosia, Cyprus
belk@cs.ucy.ac.cy

David Portugal
CITARD Services Ltd.
CY-2064 Nicosia, Cyprus
davidsp@citard-serv.com

Eleni Christodoulou
CITARD Services Ltd.
CY-2064 Nicosia, Cyprus
cseleni@citard-serv.com

George Samaras
Dept. of Computer Science
University of Cyprus
CY-1678 Nicosia, Cyprus
cssamara@cs.ucy.ac.cy

Permission to make digital or hard copies of part or all of this work for personal or classroom use is granted without fee provided that copies are not made or distributed for profit or commercial advantage and that copies bear this notice and the full citation on the first page. Copyrights for third-party components of this work must be honored. For all other uses, contact the Owner/Author.

Copyright is held by the owner/author(s).
CHI'15 Extended Abstracts, Apr 18-23, 2015, Seoul, Republic of Korea
ACM 978-1-4503-3146-3/15/04.
http://dx.doi.org/10.1145/2702613.2732881

Abstract
This paper presents a method for analyzing users' computer mouse interaction data with the aim to implicitly identify users' task completion difficulty while interacting with a system. Computer mouse motion streams and users' skin conductance signals, acquired via an in-house developed computer mouse, and users' feedback were investigated as reactions to task difficulty raising events. A classification algorithm was developed, producing real-time user models of user hesitation states. Preliminary results of a study in progress with seven older adults at work (age 56+) provide initial indications about links between mouse triggering states of user hesitation and task completion difficulty.

Author Keywords
Computer Mouse; Sensors; Older Adults; User Study.

ACM Classification Keywords
H.5.2. Information interfaces and presentation (e.g., HCI): User Interfaces.

Introduction
With the advent of highly dynamic and fast emerging technologies and software, users are required to adapt

their mental models, skills and habitual ways of working. This requirement is further intensified, when combined with eventual age-related cognitive degradations of older adults [1], causing task completion difficulty and eventually a negative user experience.

Assisting older adults while interacting with systems is of critical importance in today's information society. Researchers and practitioners alike have shown an increased interest lately in understanding behavior patterns and possible difficulties of older adults imposed by current visual and interaction designs of interactive systems [2, 3]. A number of research works exist that proposed various intelligent user interfaces and systems for supporting older adults at work and motivating them to stay for longer active and productive in computerized working environments [4, 5]. An important challenge of such intelligent and assistive interactive systems is how to implicitly identify that users have difficulties with a given task [6], and accordingly assist the users, e.g. by providing personalized and contextualized support [7].

In this context, this paper presents an implicit user data collection method for identifying users' task completion difficulty by leveraging computer mouse motion streams and a skin conductance sensor that is embedded in an in-house developed computer mouse. This work is part of CogniWin project, which aims to provide an innovative personalized system, motivating older adults to stay for longer active, and improving their productivity in the workplace. The paper is structured as follows: next we present related works, and subsequently we describe the developed computer mouse, named CogniMouse. Afterwards, we present the methodology and preliminary results of a user study that evaluated the accuracy of the computer mouse's task difficulty identification method. We conclude with practical implications and future prospects of this work.

Related Work

The literature proposes several systems that leverage users' computer mouse interaction data in order to implicitly infer important information about the users' behavior patterns. Principally, the raw mouse data being extracted and processed includes time-stamped and chronologically ordered sequences of a stream of data including the *x-y* cursor position of the mouse on the screen, mouse hover, mouse scrolling and mouse click events (left and right clicks) [8-11].

Research works have proposed various approaches for distinguishing users' behavior patterns, such as user hesitation, reading or reading by tracing text, clicking and scrolling [8, 9, 10]. Reeder and Maxion [8] proposed an automated method for identifying user hesitation with the aim to detect instances of user difficulty while interacting with a system. Based on a hesitation detector algorithm that takes as input a time-stamped, chronologically ordered data stream of mouse and keyboard events, user hesitation was defined as anomalously long pauses between events in a given data stream. Arroyo et al. [9] proposed a Web logging system that tracks mouse movements in Websites illustrating mouse trajectories of users' interactions that indicate users' reading behavior and hesitation in the menu area. A preliminary study of Mueller and Lockerd [10] revealed that users often move the mouse cursor to an empty white space of the Webpage in case they are hesitating in order to avoid accidental clicks on hyperlinks.

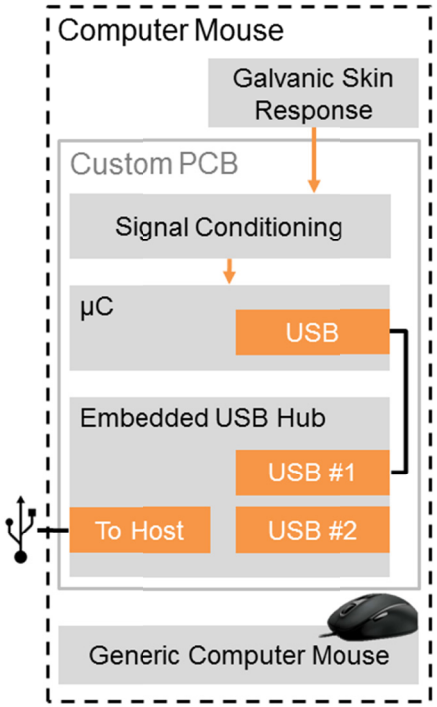

Figure 1. The CogniMouse architecture.

Unlike the aforementioned works, we propose an innovative instrumented computer mouse for advanced user interface sensing; as well as a new technique for detecting user hesitation with sensor fusion, which is not solely based on input pauses, but instead on real-time computer mouse data analysis, which benefits from detecting when the user is actually touching the device. Moreover, we validate preliminarily our system by conducting a user study, which indicates potential links between user hesitation state and task completion difficulty.

The CogniMouse Architecture

CogniMouse is a plug-and play Human Interface Device (HID) that connects to any host computer via a Universal Serial Bus (USB) as seen in Figure 1. Having driver support on all major operating systems, a custom HID protocol has been developed, which allows sending 64 bytes of different sensor data per packet. On the mouse buttons area, a transparent Galvanic Skin Response (GSR) sensor has been embedded to react to changes on the user's skin response. From the outside, the current prototype design makes use of a commercial Microsoft Comfort Mouse 4500 (*cf.* Figure 2), which causes no barrier to the users' acceptance.

To date, the main focus has been placed in the development of a classifier of user's hesitation state according to the GSR sensor input, and mouse motion streams. In this context, a parser module receives and processes the raw data coming from the mouse sensors, which is then analyzed by the classifier algorithm.

Following the philosophy described above, CogniMouse is currently being developed using C# object-oriented programming language, which has been chosen for several reasons: i) it provides a good tradeoff between efficiency, security and robustness; and ii) it provides a number of libraries for communication with hardware components, e.g. HID support.

User Hesitation Classification

Delay is a common consequence of users having difficulty with a particular task [8]. Accordingly, the developed method detects the level of difficulty in completion of tasks by the user, through the detection of hesitating behavior.

We have implemented a Bayesian Classifier to detect a general measurement of user's hesitation. Different classification techniques could be employed [12], however the classification algorithm highly depends on the properties of the specific problem to tackle, and the application of classification methods in human state prediction from multiple sources of data has different number of features and challenges. Assuming the availability of user historical data and common interval of parameters which are deemed as usual for each individual, human expertise judgment beforehand can be leveraged to model relevant data, with an important impact on the inference process. This is the case of Bayesian inference, which makes sequential use of the Bayes' formula, when more data becomes available, to calculate a posterior distribution. This provides means to make inference about an environment of interest described by a state given an observation, whose relationship is encoded by a joint probability distribution.

Specifically, our model represents the probability or the level of certainty that the user is having difficulty in

Figure 2. The current prototype design of the computer mouse makes use of a commercial Microsoft Comfort Mouse 4500.

completing the task, given by *P(Hes|ZC,V,GSR)*. To that end, we used three different inputs in our Bayesian Classifier: i) the number of zero-crossings of the motion vector over the last 4 seconds of mouse usage (*ZC*); ii) the average intensity of the velocity vector over the last 4 seconds of mouse usage (*V*); and iii) the galvanic skin response value (*GSR*). The zero-crossings' input represents the number of times that the user changed motion direction when using the mouse.

Since we are developing a general model and no personalized data of the user is available at this stage, we assume that there is no prior information about the user. Thus the prior distribution, *P(Hes)*, is defined as uniform, where all decisions are equiprobable. Additionally, we need to define the likelihood functions, *P(input|Hes)*, so as to model each input according to the expected hesitation.

The hesitation state of the user is obtained by fusing all the inputs by applying Bayes Formula in each iteration of the following algorithm:

$$P(Hes|ZC,V,GSR) = \frac{P(Hes)\cdot P(ZC|Hes)\cdot P(V|Hes)\cdot P(GSR|Hes)}{P(ZC)\cdot P(V)\cdot P(GSR)}$$

Method of Study

A user study was conducted with the aim to initially evaluate the accuracy of the user hesitation classification algorithm.

Procedure

Controlled laboratory sessions were conducted in which participants were required to perform a series of tasks (i.e., change settings of a Web browser) on a standard desktop computer (IBM Thinkcenter M73, 21'' monitor), using a standard keyboard and the developed computer mouse which recorded the mouse motion stream data and users' skin conductance signals. Screen capturing software and audio data based on the think-aloud protocol were recorded which were later analyzed by a user experience researcher aiming to identify users' task completion difficulty. This information was critical since it serves as an evaluation basis for the user hesitation triggering events of CogniMouse. A pre-study questionnaire was also provided to the participants to rate their experience with computers, the frequency of using the Web browser in their daily work, and the frequency they use Web browser tools, i.e. General Settings, Privacy, Security and Advanced Settings.

Users' Task Completion Difficulty Identification

Based on the screen capturing software and the think-aloud audio data, users' task completion difficulty while performing a particular task was empirically detected and evaluated based on the following criteria: i) user statements (e.g. "I don't know …"); ii) user silence and inactivity of computer mouse and keyboard for a considerable period of time; and iii) user asks for help from the user experience researcher. Periods of task completion difficulty are noted as soon as one of the above criteria are met until the user clearly performs an action (e.g. mouse click) indicating that the user is not in a difficulty state anymore, or when the user states that he/she is going to perform an action or that the difficulty has been overcome (e.g. "OK, I will …").

Tasks

All participants were required to complete three tasks within a Web browser (Google Chrome v.39). The following tasks were provided in a random sequence to all participants, which primarily require changing the

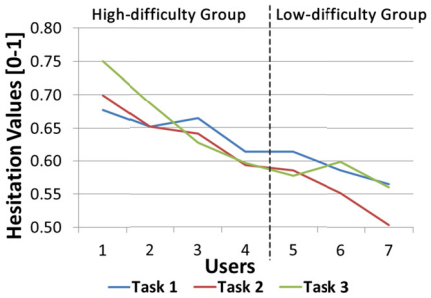

Figure 3. Means of hesitation values per user and task.

Figure 4. Means of hesitation values per task and user group.

Web browser's settings: i) "Set your preferred Website as your Web browser's start page"; ii) "Set the search engine to be used when searching from the Web browser's search box (omnibox)"; iii) "Set your Web browser's cookie policy to block Websites from writing any data on your computer". These tasks were chosen since they are performed by the users using primarily the computer mouse, and require limited keyboard typing input.

Data Analysis

Two types of data were analyzed: i) *user hesitation output*, triggered by the CogniMouse user hesitation classification algorithm; and ii) *task completion difficulty* as noted by the user experience researcher based on the screen capturing software and the think-aloud audio data analysis.

Participants

A total of seven individuals (4 male and 3 female) participated in the study, and their age varied between 56 and 67 (mean age 62). All participants are using computers and accessing Websites on a daily basis. Based on the pre-study questionnaire, four participants consider themselves as average to experienced, while three consider themselves as novice to average in regards with knowledge and experience with computers. All participants use the Web browser for the daily work activities. In regards with frequency of handling the settings of the Web browser, three participants rated themselves as experienced, whereas the remaining four as novice.

Analysis of Results

For our analysis we have separated users into two groups: the *High-difficulty Group* that includes four participants that had significant task completion difficulties while performing all the three tasks, and the *Low-difficulty Group* that includes three participants that did not have any major task completion difficulties while performing the tasks. The categorization into these groups was based solely on the empirical analysis made based on the screen capture data and the think-aloud audio analysis. Figure 3 illustrates the means of user hesitation values per user and task; High-difficulty Group includes User #1-4, and the Low-difficulty Group includes User #5-7. Figure 4 illustrates the means of user hesitation values per group.

An independent-samples t-test was run to determine if there were differences in user hesitation values between the High-difficulty and Low-difficulty user groups. There was homogeneity of variances, as assessed by Levene's test for equality of variances (p=0.475). Results revealed that users of the High-difficulty Group triggered higher user hesitation scores (0.65±0.045) than those of the Low-difficulty Group (0.57±0.026). These were statistically significant different at 0.082 ($t(5)$=2.757, p=0.04, d=0.21). Furthermore, descriptive statistics reveal that users of the Low-difficulty Group scored lower user hesitation values in all three tasks (Figure 4).

Conclusions and Future Work

The purpose of this paper is to present results of a work in progress that aims to implicitly identify users' task completion difficulty by leveraging computer mouse motion data and users' skin conductance signals. A user study was conducted with seven older adults to investigate the accuracy of the user hesitation classification algorithm. Empirical data, based on screen capture information and think-aloud audio data,

revealed that users having difficulty with particular tasks scored higher user hesitation values compared to users that did not face any major task completion difficulties. Although the analysis yielded statistical significant results, these results shall be confirmed in further studies with a larger sample and users with varying profiles and ages. Finally, we believe that even though this study is focused on older adults, in general, identifying task completion difficulty through the computer mouse could be suitable for other age groups.

In the future, we intend to contextualize the mouse data so that the system provides adaptive support taking the user's task into account, when difficulty is identified. Moreover, further sensors shall be embedded in CogniMouse to detect additional user behaviors, as well as information from other devices, such as an eye tracker, which will be integrated in order to trigger personalized assistance.

Acknowledgements

This work was partially carried out in the frame of the CogniWin project, funded by the EU Ambient Assisted Living Joint Program (AAL 2013-6-114) as well as the EU FP7 project Miraculous-Life (#611421) and the Cyprus Research Promotion Foundation project PersonaWeb (ΤΠΕ/ΠΛΗΡΟ/0311(ΒΙΕ)/10).

References

[1] Kausler, D.H., Salthouse, T.A., Saults, J.S. Temporal memory over the adult lifespan. *The American Journal of Psychology 101*, 2, 207-215.

[2] Findlater, L., Froehlich, J., Fattal, K., Wobbrock, J., Dastyar, T. Age-related differences in performance with touchscreens compared to traditional mouse input. In *Proc. CHI 2013*, ACM Press (2013), 343-346.

[3] Waycott, J., Vetere, F., Pedell, S. Designing communication technologies for socially isolated older people: Fieldwork reflections. In *Proc. CHI 2013, Workshop on Designing for -and with- Vulnerable People*, ACM Press.

[4] Leung, R., Findlater, L., McGrenere, J., Graf, P., Yang, J. Multi-layered interfaces to improve older adults' initial learnability of mobile applications. *ACM Trans. Access. Comput. 3*, 1, Article 1 (2010), 30 p.

[5] Lindsay, S., Jackson, D., Schofield, G., Olivier, P. Engaging older people using participatory design. In *Proc. CHI 2012*, ACM Press (2012), 1199-1208.

[6] Atterer, R., Wnuk, M., Schmidt, A. Knowing the user's every move: user activity tracking for website usability evaluation and implicit interaction. In *Proc. WWW 2006*, ACM Press (2006), 203-212.

[7] Brusilovsky, P., Kobsa, A., Nejdl, W. *The adaptive web: methods and strategies of web personalization*. Springer Verlag, Heidelberg, 2007.

[8] Reeder, R. Maxion, R. User interface defect detection by hesitation analysis. In *Proc. DSN 2006*, IEEE Computer Society (2006), 61-72.

[9] Arroyo, E., Selker, T., Wei, W. Usability tool for analysis of web designs using mouse tracks. *Ext. Abstracts CHI 2006*, ACM Press (2006), 484–489.

[10] Mueller, F., Lockerd, A. Cheese: Tracking mouse movement activity on websites, a tool for user modeling. *Ext. Abstracts CHI 01*, ACM (2001), 279-280.

[11] Huang, J., White, R., Dumais, S. No clicks, no problem: using cursor movements to understand and improve search. In *Proc. CHI 2011*, ACM Press (2011), 1225-1234.

[12] Luz, J.M., Couceiro, M., Portugal, D., Rocha, R.P., Araújo, H., Dias, G. Comparison of classification methods for golf putting performance analysis. *Comp. Intel. and Dec. Mak. 61*, 35-45.